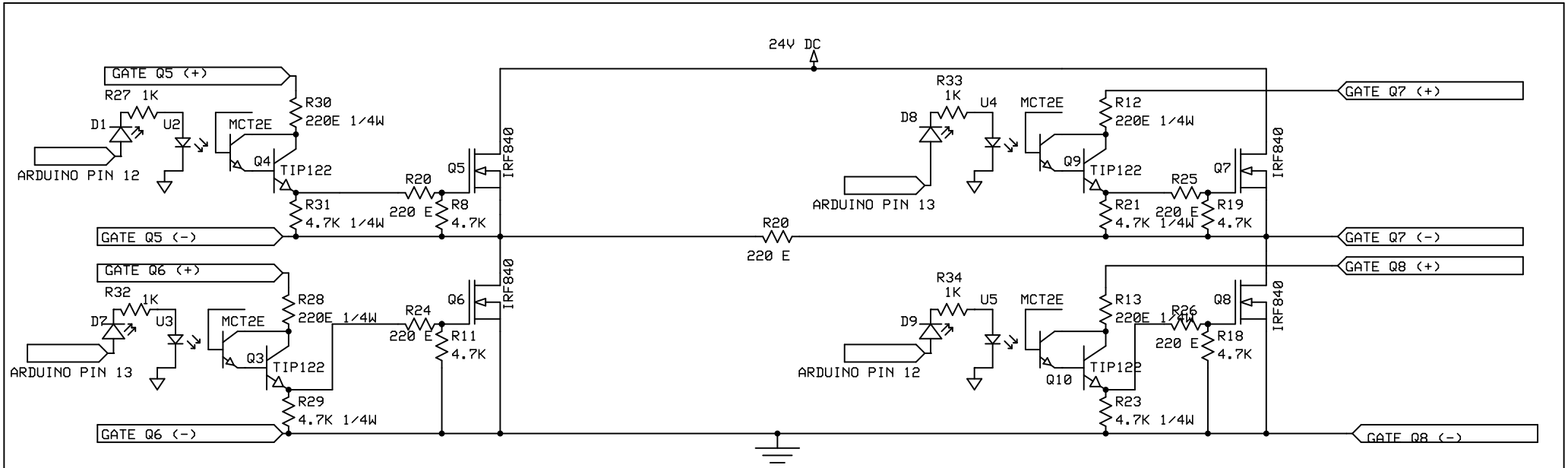

SHIVALIK AUTOMATION		
H BRIDGE WITH ARDUINO		
RUPJIT CHOWDHURY	Rev 1.0 28/03/2026	Page 2/3